HWM Global

Innovations that keep critical resources flowing.

hwmglobal.com
+44 (0)1633 489479

LoLog 450

Flexible Data Logger

LoLog 450 is a highly flexible and cost-effective data logger. Completely waterproof, submersible and battery powered it is designed for portable use and can be supplied in single or dual channel variants.

The analogue channel can be used for internal pressure and external pressure. We also offer 4-20mA channel and our digital channel is available for flow and status data. The dual option combines one analogue and one digital channel, or two analogue channels.

LoLog 450 incorporates a high level of features including Pulse Interval Timing to establish accurate recording of minimum flow and it can store up to 64,000 readings which may be increased when purchased with extended memory to 1,000,000 readings (depending on the variability of the data.)

Applications

The LoLog is available with 0.1% FSC accuracy for network modelling applications. It can be quickly attached to any pulse output meter to enable urgent investigation. The small, light logger fits easily into boundary boxes and is widely used to assess demand in residential areas.

The LoLog is highly economical and well suited to connection to networks where telemetry is not desirable or appropriate. The pressure channel variant on the LoLog also monitors PRV performance.

Key Features

- **Long-term monitoring:** 5 year battery life in typical use.
- **Superior system connectivity:** second channel enables connection to other devices.
- **Expandable memory:** up to one million data values on single channel variant if purchased with optional memory upgrade.
- **Durable:** LoLog 450 is housed in a rugged plastic case.
- **Pressure sensors:** internal or external pressure sensor, 4-20mA
- **Local data download:** via infra-red interface into Laptop or PC.
- **Software compatibility:** fully compatible with Radwin.
- **Multiple logging modes:** cyclic logging, stop when full, start and stop and event logging.
- **Excellent serviceability:** the unit can be opened and directly accessed.
- **Low maintenance:** the high IP68 rating has been achieved without potting, making the unit easy to maintain.
- **Fully waterproof:** the IP68 rating has been tested at 10m depth over a 24 hour period.

HWM Global

Innovations that keep critical resources flowing.

hwmglobal.com
+44 (0)1633 489479

LoLog 450

Flexible Data Logger

Sensor Input Options

Digital: Uni- or Bi-directional pulse/status.

Reed switch contact closure type or equivalent sensors including Kent LRP and PU10 pulse heads, Aquamag/Magmaster.

Up to 64 pulses per second.

Analogue: Internal or External Pressure Transducer.

Typical accuracy 0.2% FSD supplied as standard, but 0.1% FSD available if specified at time of order.

4-20mA from isolated sensor. Please note only one analogue channel can be 4-20mA.

Memory: Recording 64,000 readings in continuous (cyclic) operation. Unit can be purchased with optional extended memory to 1,000,000 data values depending on variability of data.
Please note that the correct configuration must be ordered at the time of purchase as changes cannot be made after manufacture.

Communication

Serial: RS232 by infra-red port for connection to laptop or desktop PC.

Specifications

Frequency:	Sample Periods in 1 second increments from 1 to 60 seconds. Then 1 minute increments from 1 to 60 minutes. Then 1 hour increments from 1 to 24 hours.
Logger ID:	Up to 7 alphanumeric characters.
Site ID:	Up to 127 alphanumeric characters.
Clock:	Onboard 24 hour real-time clock with date facility.
Logging Modes:	Count and Event (PIT) logging modes. Bi-directional capability.
Dimensions:	92H x 126W x 44D (mm) - 3.6" x 4.9" x 1.7"
Construction:	Rugged plastic enclosure.
Weight:	210g (0.5lb) - can vary by option.
Operating Temp:	-20 to +60°C (-5 to +140°F).
Ingress Protection:	IP68 submersible.
Power:	Lithium battery operational for 5 years under typical operating conditions.

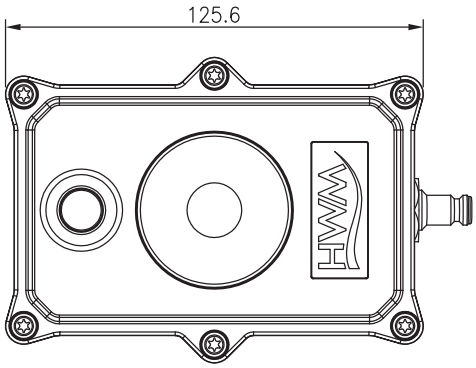

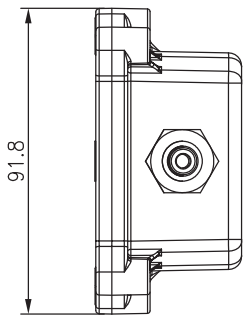

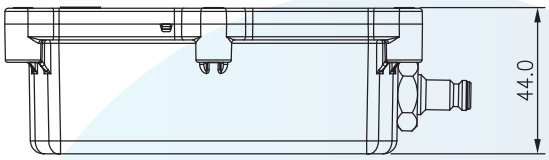

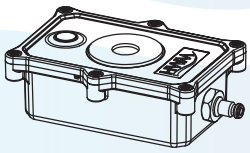

ISO 9001 QUALITY MANAGEMENT
ISO 14001 ENVIRONMENTAL MANAGEMENT
ISO 27001 INFORMATION SECURITY MANAGEMENT
ISO 45001 HEALTH & SAFETY MANAGEMENT
CYBER ESSENTIALS