HWM Global

Innovations that keep critical resources flowing.

hwmglobal.com
+44 (0)1633 489479

Hydrophone 2

High Performance Plastic/Trunk Main Sensor

Our all-new Hydrophone 2 is an advanced leak noise sensor that is proven to deliver significantly increased performance on plastic pipes and trunk mains.

Extremely sensitive, and ideal for detecting low frequency leak noise, Hydrophone 2 excels in difficult larger diameter and non-metallic pipelines.

Applications

Hydrophone 2, when combined with an advanced data logger and GPS antenna is deployed as PermaNet TM GPS, a high-performance leak detection system that produces accurate correlations over greater distances.

Capable of monitoring plastic pipelines, PermaNet TM GPS can also be supplied with pressure and flow inputs, with pressure channel supporting a fast-logging mode to detect transients.

Key Features

- **High Performance:** increased leak detection and correlation performance over long pipe lengths, larger diameter and non-metallic pipes.
- **Sensitive:** highly sensitive to low frequency noise.
- **Advanced:** all new sensor and amplification circuitry provides a step change in performance on plastic pipes and trunk mains.
- **Accurate:** allows leaks to be detected and pinpointed in situations where standard accelerometers will not.
- **Versatile:** screws directly into Aptlas/boundary box fittings: compatible with a range of hydrant adapters and other pressure-enabled fittings.
- **Compliant:** DWI reg 31 approved.
- **Compatibility:** compatible with Touch Pro correlators and PermaNet+ acoustic loggers.
- **Pressure Monitoring:** includes additional push-fit pressure monitoring point as standard.

Specification

Operating Temp:	-20 to +60°C (-5 to +140°F).
Storage Temp:	-40 to +60°C (-40 to +140°F).
Ingress Protection:	IP68.
Weight:	1.6kg (3.5lb).
Safety:	Tested to 25Bar
Material:	DWI regulation 31

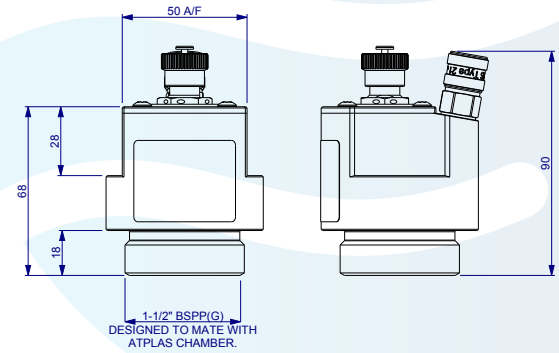

ISO 9001 QUALITY MANAGEMENT
ISO 14001 ENVIRONMENTAL MANAGEMENT
ISO 27001 INFORMATION SECURITY MANAGEMENT
ISO 45001 HEALTH & SAFETY MANAGEMENT
CYBER ESSENTIALS

HWM-Water Limited (Trading as HWM Global). Registered in England and Wales Number 01463016
and registered office is Ty Coch House | Llantarnam Park Way | Cwmbran | NP44 3AW | UK
DAT-165-0001-C 17.02.2026

A **Halma** company