HWM Global

Innovations that keep critical resources flowing.

hwmglobal.com
+44 (0)1633 489479

Intelligens WW

LTE-M & NBIoT-enabled Multi-Channel Data Logger

Intelligens WW is an intrinsically safe, multi-channel logger ideally suited to a variety of wastewater applications.

A flexible and rugged solution that can be tailored to specific applications, Intelligens WW is UKCA/ATEX-certified (Zone 0) for use in explosive environments.

Intelligens WW benefits from integrated telemetry and two-way communications for remote programming, making Intelligens WW an ideal logging solution for combined sewer overflows, general sewer monitoring, storm drains, storage tanks and flood warning systems.

Applications

Intelligens WW is truly flexible, making it the ideal data logger for hazardous utility network applications. Compatibility with ESI and ESIB accessories means that a variety of different sensors can be connected to the logger effortlessly.

Additionally, Remote communications and a long-life battery make Intelligens perfectly suited to 'fit and forget' applications in remote or hard to access locations.

Key Features

- **Certification:** certified for use in Zone 0 hazardous areas (visit HWM Global website for certification details).
- **Two-way communication:** unit can be remotely programmed; suitable for 'fit and forget' applications.
- **Telemetry:** NBIoT LTE-based cellular communication as standard with fallback 2G capability.
- **Flexible sensor integration:** Intelligens WW is compatible with a wide variety of sensors and inputs.
- **Online data delivery and viewing:** compatible with DataGate and HWM Online.
- **Intelligent:** unit includes advanced data logging and alarm regimes.
- **Long-term monitoring:** typical 5+ years battery life.
- **Fully waterproof:** unit is rated IP68, making it waterproof when submerged.
- **Easy maintenance:** user replaceable SIM and battery, along with notifications of system health.
- **Anti-corrosion:** plastic connectors ensure unit is not susceptible to corrosion.
- **Upgradable:** unit can be configured, and its firmware upgraded, remotely.
- **WITS 1.3 protocol:** support for WITS 1.3 delivering direct integration with WITS SCADA systems.

HWM Global

Innovations that keep critical resources flowing.

hwmglobal.com
+44 (0)1633 489479

Intelligens WW

LTE-M & NBIoT-enabled Multi-channel Data Logger

Communication

Internal Cellular Modem:	Cellular modem supporting 5G/NBIoT or 4G/LTE Cat-1.
Accelerated Dial-in:	Dial-in rate is increased if alarm situation is triggered. Logger can accelerate dial-in at alarm level for multiple applications - including SonicSens 3, Flow, Pressure and other alarmed sensors.

Sensor Input

mV:	Example: pressure sensor for level measurement.
Serial Digital Interface:	Modbus SDI12 and RS232.
4-20 mA:	Example: mems tils transmitter, radar sensor.
Digital:	Example: float switch, rain gauge.
Level Sensor:	Ultrasonic level detection using SonicSens 3.

Control Output Ports

Digital:	2 independent configurable outputs.

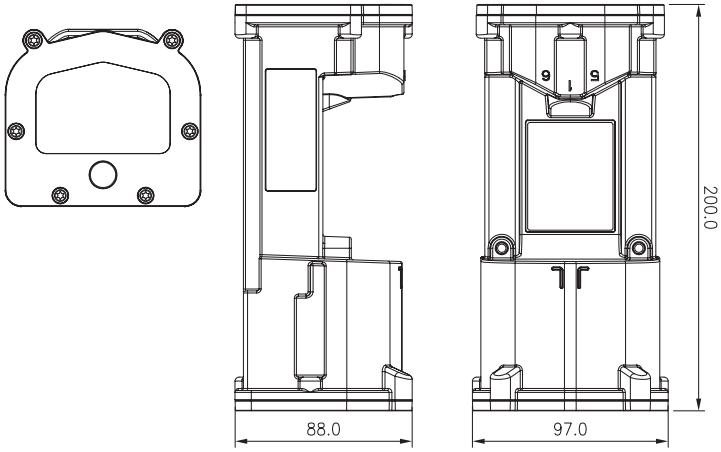

Specifications

Rating:	ATEX/IEC certified to Zone 0.
Memory:	Up to 2 million readings.
Firmware:	Safe local and remote upgradable firmware.
Sampling Rate:	Variable sample rate 1s to 24hrs, accelerating on alarm.
Alarms:	Multiple Lower/Upper Limit, Min Flow, Rate of Change, Channel Difference, In/Out of Band alarm types. Accelerated dial-in on alarm.
Secondary Channel:	Log fast data, average minimum, average maximum or event duration.
Dimensions:	200H x 97W x 88D (mm) - 7.9" x 3.8" x 3.5"
Weight:	1kg (2.2lb).
Operating Temp:	-20 to +60°C (-5 to +140°F).
Ingress Protection:	IP68.
Power:	User replaceable battery pack, operational for 5+ years under standard operating conditions, complete with low battery alarm. External power option available with a sustainable ATEX certified power source.

HWM Global Apps

Logger Installation Support

The HWM Global Deployment App is an installation tool that supports the quick and effective deployment of HWM Global manufactured data loggers. As well as recording installation details, the IDT App is used to test signal strength during installation.

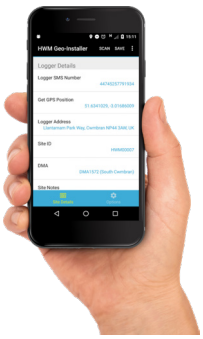

ISO 9001 QUALITY MANAGEMENT · ISO 14001 ENVIRONMENTAL MANAGEMENT · ISO 27001 INFORMATION SECURITY MANAGEMENT · ISO 45001 HEALTH & SAFETY MANAGEMENT · CYBER ESSENTIALS · IEC · IECEx

HWM-Water Limited (Trading as HWM Global). Registered in England and Wales Number 01463016
and registered office is Ty Coch House | Llantarnam Park Way | Cwmbran | NP44 3AW | UK
DAT-142-0001-B 06.01.2026

A Halma company