HWM Global

Innovations that keep critical resources flowing.

hwmglobal.com
+44 (0)1633 489479

IS Log

ATEX-certified Data Logger

Developed for flexibility, IS Log is a highly versatile, intrinsically safe data logger suitable for cost-effective mass deployment installations.

IS Log is built for compatibility, pairing seamlessly with a wide range of sensors, including ultrasonic, radar, depth transducers, capacitance and flood alert.

This flexibility makes IS Log the perfect choice for low-cost mass deployment situations. IS Log is battery powered and ATEX-certified to Zone 0, making it a reliable option in hazardous environments.

Applications

Sewer Level Monitoring - pairing IS Log with RadarSens or RadarSens LR delivers a cost-effective, battery powered sewer level monitoring solution.

Early Warning Blockage Alert - combining IS Log with SpillSens creates a multi-alarm system for incident prevention monitoring of customer-side and small sewers.

Key Features

- **Intrinsically safe:** certified for use in Zone 0 hazardous areas (visit HWM Global website for certification details).
- **Multi-application:** compatible with a wide range of sensors, including ultrasonic, depth transducers and flood alert.
- **Easy software integration:** designed for easy integration into third party software applications via Datagate API.
- **Telemetry:** advanced cellular telemetry options available (contact HWM Global for more information).
- **Flexible alarm modes:** including multiple analog high/low, state high/low and profile alarms.
- **Online data viewing:** via DataGate and EnviroView - the multi-utility data monitoring system.
- **Long-term monitoring:** typical 5+ year battery life.
- **External antennas:** supports improved signal strength (contact HWM Global for more information).
- **Wireless programming:** units can be programmed and activated locally through HWM Global's Deployment app. Changes to transmitting units can be made remotely.
- **Responsive:** accelerated dial-in on alarm.

HWM Global

Innovations that keep critical resources flowing.

hwmglobal.com
+44 (0)1633 489479

IS Log

ATEX-certified Data Logger

Specifications

Rating:	ATEX/IEC Certified to Zone 0.
Memory:	Primary recording 1 million readings (larger sizes available on request).
Analogue:	Variable sample rates from 1s to 24hrs.
Alarms:	Multiple Lower/Upper limit, Min Flow, Rate of Change, Channel Difference, In/Out of Band alarm types.
Secondary Channel:	Can be programmed to record either fast data, average minimum, average maximum or time interval between pulses (for data smoothing).
Internal Cellular Modem:	Advanced cellular telemetry options available (contact HWM Global for more information).
Accelerated Dial-In:	Dial-in rate is increased if alarm situation is triggered. Logger can accelerate dial-in at alarm level for multiple applications.
External Antenna:	Bulgin Buccaneer.
Construction:	PC/ABS plastic enclosure.
Dimensions:	155H x 119W x 80D (mm) - 6.0" x 4.7" x 3.1"
Weight:	1kg (2.2lb).
Operating Temp:	-20 to +60°C (-5 to +140°F).
Ingress Protection:	IP68.
Power:	User-replaceable Lithium Thionyl-Chloride battery pack operational for 5 years under standard operating conditions.

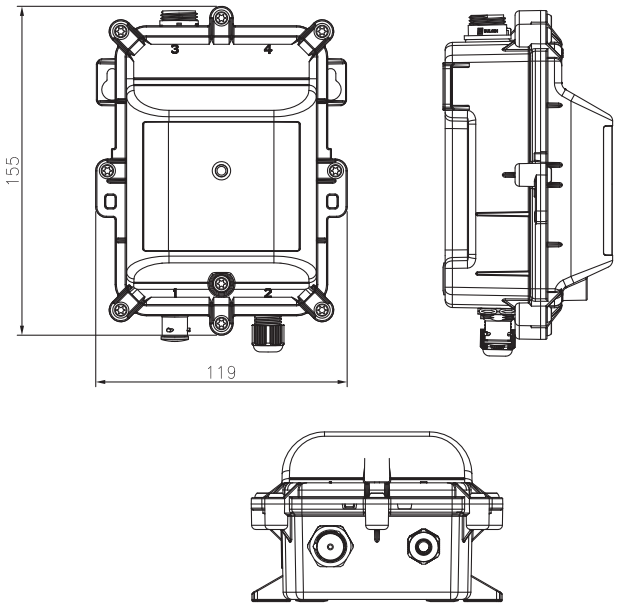

SpillSens

ATEX-certified Digital Float Sensor

SpillSens is a low-cost, multi-alarm digital float sensor designed to act as an early warning system for blockages and sewer overflows.

ATEX-approved and built to withstand harsh sewer environments, SpillSens uses digital positioning technology to monitor rising levels in the waste water network.

RadarSens LR

Long Range Radar Level Monitoring

RadarSens, and the new RadarSens LR, provide a comprehensive and highly cost-effective solution for level monitoring applications up to 14m.

Interchangeable on a single logger for 'right first time' deployment and simple sensor exchanging, RadarSens and RadarSens LR uses radar sensing technology to effectively monitor and transmit waste water network level data.

ISO 9001 QUALITY MANAGEMENT · ISO 14001 ENVIRONMENTAL MANAGEMENT · ISO 27001 INFORMATION SECURITY MANAGEMENT · ISO 45001 HEALTH & SAFETY MANAGEMENT · CYBER ESSENTIALS · IEC · IECEx