HWM Global

Innovations that keep critical resources flowing.

hwmglobal.com
+44 (0)1633 489479

RadarSens

Radar Level Sensor

RadarSens is an intrinsically safe level monitoring system that uses radar sensing technology and advanced cellular telemetry to monitor and transmit waste water network level data.

RadarSens is simple to install and cost-effective, using a variety of stainless-steel, non-drill brace bars or conventional wall brackets for 'right first time' deployment. Additionally, a laser alignment tool (supplied separately) is available to check the device is level and aligned correctly during the rapid installation.

Installation and local configuration is carried out using Bluetooth® communication between the logger and IDT App. This allows for in-chamber NB-IoT, LTE-M or 2G signal strength testing and sensor reflection tracing to significantly reduce the likelihood of call-in or poor data quality issues post deployment. Site information is collected and synchronised with the DataGate platform at same time as installation using the Installer App.

Applications

Built to operate in harsh environments, the RadarSens system is compatible with a variety of quick-fit installation brackets and can be supplied with a laser alignment tool for accurate sensor positioning.

RadarSens is quickly and easily installed through the Deployment App. Any required site data (including photographs) can be uploaded and the app also provides positioning data. Everything is synced to DataGate automatically and attached to GIS (if uploaded).

Key Features

- **Intrinsically Safe:** certified for use in Zone 0 hazardous areas (visit HWM Global website for certification details).
- **Radar technology:** advanced and cost-effective radar sensor delivers precise data for long-term network monitoring.
- **Accurate:** ±3mm accuracy (subject to installation), with a 3m range.
- **Battery powered:** typical 5+ year battery life.
- **Dependable:** IP68, rugged construction and long-life battery.
- **Telemetry:** compatible with NBIoT, LTE-M and 2G cellular networks for futureproofing.
- **Bluetooth® connectivity:** local Bluetooth® configuration allows for definitive in-chamber signal strength testing and sensor reflection tracing using the IDT app (Android and iOS).
- **Sensor health check:** remote monitoring of sensor position (pitch & roll), data quality and chamber temperature to confirm if unexpected changes in level trends are related to third-party activity.
- **Secure:** a range of easy-fit stainless steel wall brackets and non-drill installation brace bars are available.
- **Installation app:** supporting quick and accurate mass deployment.
- **Drop-in laser alignment tool:** to assist installation and ensure the sensor is positioned correctly (supplied separately).

HWM Global

Innovations that keep critical resources flowing.

hwmglobal.com
+44 (0)1633 489479

RadarSens

Radar Level Sensor

Specifications

Operating Temp:	-20 to +60°C (-5 to +140°F).
Dimensions:	40H x 110W x 111D (mm) - 1.6" x 4.3" x 4.3"
Accuracy:	±3mm (subject to installation)
Range	3m
Ingress Protection:	IP68 rated.
Rating:	UKEx/ATEX/IEC Ex certified to Zone 0.
Alarms:	Multiple threshold, profile & pitch & roll with additional diagnostics.
Deployment:	Drop-in alignment tool (supplied separately).
Antenna (logger):	Bulgin.
Battery (logger):	Typical 5+ year battery life.
Internal Cellular Modem (logger):	Advanced cellular telemetry options available (contact HWM Global for more information).

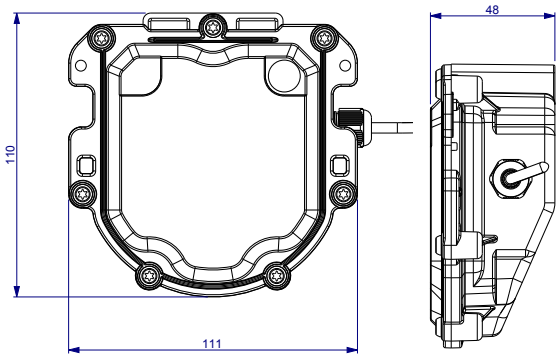

IS Log

ATEX Certified Data Logger

RadarSens is typically deployed with IS Log for single applications but is compatible with numerous HWM Global loggers for multi-channel applications. The sensor is powered by the logger.

With thousands of units installed in sewer and gas networks worldwide, IS Log is trusted to deliver dependable data through advanced cellular telemetry.

IS Log is IP68 rated, has a typical five-year battery life and is programmed via our easy-to-use installation app.

RadarSens LR

Long Range Radar Level Monitoring

RadarSens, and the new RadarSens LR, provide a comprehensive and highly cost-effective solution for level monitoring applications up to 14m.

Interchangeable on a single logger for 'right first time' deployment and simple sensor exchanging, RadarSens and RadarSens LR uses radar sensing technology to effectively monitor and transmit wastewater network level data.

ISO 9001 QUALITY MANAGEMENT | ISO 14001 ENVIRONMENTAL MANAGEMENT | ISO 27001 INFORMATION SECURITY MANAGEMENT | ISO 45001 HEALTH & SAFETY MANAGEMENT | CYBER ESSENTIALS

HWM-Water Limited (Trading as HWM Global). Registered in England and Wales Number 01463016
and registered office is Ty Coch House | Llantarnam Park Way | Cwmbran | NP44 3AW | UK
DAT-170-0001-B 17.02.2026

A Halma company