HWM Global

Innovations that keep critical resources flowing.

hwmglobal.com
+44 (0)1633 489479

MicroCorr Touch Pro

High Performance Leak Noise Correlator

Touch Pro is a high-performance, user-friendly leak noise correlator that features automated filtering and a rugged design for fast, accurate water leak detection in the field.

Designed for precise leak detection in water distribution systems, Touch Pro features a bright, full-colour touchscreen (with a high sun mode) and intuitive step-by-step interface, simplifying the correlation process for both new and experienced users.

Advances in leak detection technology and significant developments in the leak noise processing path allows Touch Pro to deliver improved performance in traditionally difficult conditions.

Applications

Engineered for accuracy and ease of use, Touch Pro utilises proprietary Automated Filtering Intelligence System (AFIS) to run over 50 filter combinations automatically, eliminating manual adjustments and maximising correlation accuracy to pinpoint leaks within 1 meter in real-time or while working with pre-recorded data.

When combined with Hydrophone 2, Touch Pro delivers outstanding results even in traditionally difficult conditions, such as on plastic pipes. Perfect for utilities and contractors, Touch Pro offers powerful performance, sturdy design, and great value to provide dependable leak detection in all environments.

Key Features

- **Automatic Intelligent Filtering System:** obtains best result by automatically optimising filters.
- **Tri-Filtering:** function for displaying three preferred filter settings simultaneously.
- **Accurate and efficient:** delivers cleaner and faster correlation results.
- **Resistive colour touch screen:** clear multifunctional graphics for ease of use; can be used with gloves.
- **High quality:** upgraded long range telemetry.
- **Easy to use:** step by step menu system guides user through correlation process.
- **User definable pipe types and velocity:** to ensure accuracy of results.
- **Portable and durable:** robust materials and compact design.
- **In-case charging:** through mains and 12V vehicle supply.
- **External antennas:** support improved transmission (contact HWM Global for more information).

HWM Global

Innovations that keep critical resources flowing.

hwmglobal.com
+44 (0)1633 489479

MicroCorr Touch Pro

High Performance Leak Noise Correlator

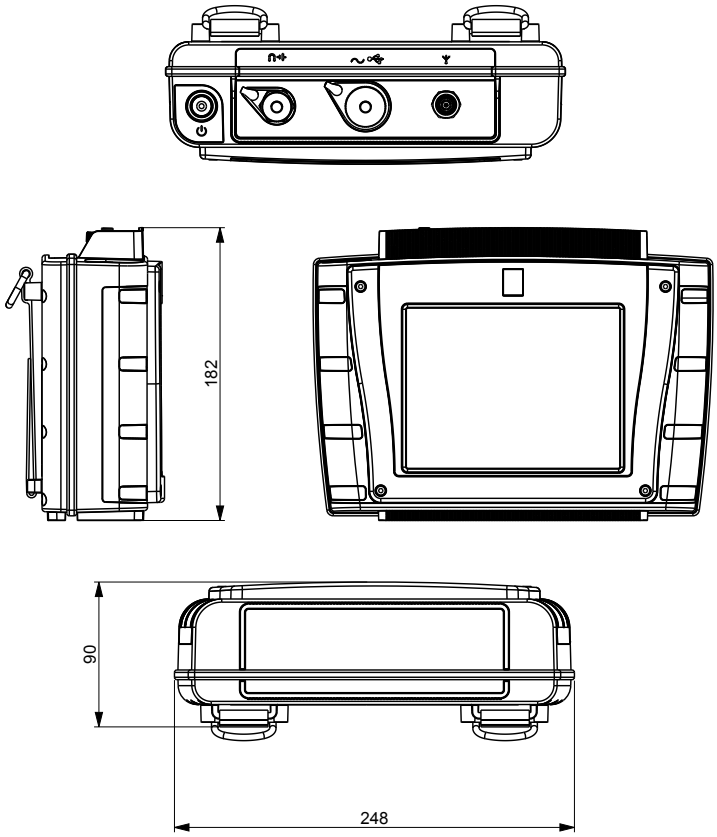

Control Unit

Filter Selection:	Manual, FFT, Coherence and Tri Filter correlation. Pipe-data related default settings.
Resolution:	+ 0.1m
Display:	7" Resistive VGA colour touch screen.
Antenna:	External antennae/magmount (optional).
Battery Type:	Rechargeable lithium batteries, field replaceable
Battery Life:	12 hours (rechargeable in case)
Language:	Selectable via menu
PC Download:	USB to PC, Windows compatible software
Dimensions:	182H x 248W x 90D (mm) - 7,2" x 9.8" x 3.6"
Weight:	1.9kg.
Temp. Range:	-20 to +50°C (-5 to +120°F).
Ingress Protection:	IP65.
Enclosure:	PC/ABS plastic enclosure.
Connectors:	Military specifications.

Sensor

Frequency Response:	d.c- 5000Hz.
Environment:	IP68, rubber shroud for shock protection.
Connection:	2m/3m/5m cables with strain relief military spec connector.

Case

Charging:	In case charging through mains 12V vehicle supply. Case indicates charging for all components.

Outstation

Radio Frequency:	Local regulations apply.
Connections:	Headphones, external antenna, charging.
Battery Type:	Rechargeable lithium batteries, field replaceable
Battery Life:	12 hours (rechargeable)
Antenna:	External antenna (optional)
Dimensions:	200H x 135W x 50D (mm) - 7.9" x 5.3" x 2.0"
Weight:	870g.
Ingress Protection:	IP65.
Housing:	PC/ABS plastic enclosure.
Connectors:	Military specifications.

ISO 9001 QUALITY MANAGEMENT · ISO 14001 ENVIRONMENTAL MANAGEMENT · ISO 27001 INFORMATION SECURITY MANAGEMENT · ISO 45001 HEALTH & SAFETY MANAGEMENT · CYBER ESSENTIALS

HWM-Water Limited (Trading as HWM Global). Registered in England and Wales Number 01463016
and registered office is Ty Coch House | Llantarnam Park Way | Cwmbran | NP44 3AW | UK
DAT-068-0001-B 07.02.2026

A Halma company