HWM Global

Innovations that keep critical resources flowing.

hwmglobal.com
+44 (0)1633 489479

PermaNet+

Fixed Network Correlating Leak Noise Logger

PermaNet+ is the award-winning leak detection system that combines a leak noise sensor with versatile telemetry technology, creating a fixed network to monitor leakage.

A cost-effective solution that is practical for large-scale deployment, PermaNet+ includes latest developments such as AI processing and satellite time synchronisation options.

Compatibility with Google Maps and GIS means that users are provided with real-time representations of precise PermaNet+ deployment sites, and leakage data, allowing leakage teams to respond quickly to alarms.

Applications

Once installed, leak data is transmitted and analysed using the proven Permalog algorithm, PermaNet Web and the latest developments in AI technology. PermaNet+ transmits data through an integral modem with GPRS/2G, 4G, LTE-M (Cat-1) and NBIoT.

PermaNet+ allows leakage teams to monitor the status of each deployed logger from Google Maps compatible software using any internet enabled device. Leaks are identified immediately and once the presence of a leak has been identified, secondary measures including AI can be used to check and remove 'false positives' and correlate the leak position.

Key Features

- **Quick response:** enables leakage teams to respond quickly to specific locations when a leak is detected.
- **Telemetry:** multiple telemetry options including 4G, LTE and NBIoT.
- **Satellite time synchronisation option:** for precise correlation and leak pinpointing.
- **Secondary validation:**
  - Aqualog - detailed noise histogram to reduce 'false positives'
  - Audio - remotely listen to the noise
  - Remote correlation to localise leak position
  - PermaNET Web, with multiple secondary analysis including historic data and AI processing.
- **Fully waterproof:** the IP68 rating has been tested at 10m depth over a 24 hour period.
- **Easy to use:** compatible with the HWM Global Deployment app and can also be programmed through PermaNet Web
- **External antennas:** support improved signal strength (contact HWM Global for more information).

- **PermaNET Web:** software supports:
  - Correlation
  - AI processiong options
  - Map view
  - Aqualog
  - select GIS file formats
  - Remote configuration
  - Filtering
  - Threshold Modelling
  - Electrical Noise identification

HWM Global

Innovations that keep critical resources flowing.

hwmglobal.com
+44 (0)1633 489479

PermaNet+

Fixed Network Correlating Leak Noise Logger

Specifications

Operating Temp:	-20 to +60°C (-5 to +140°F).
Memory:	Primary recording: 1 million readings.
Dimensions:	Logger (without antenna): 84H x 115W x 114D (mm) - 3.3" x 4.5" x 4.5" Leak Noise Sensor: 90H x 50W x 50D (mm) - 3.5" x 2.0" x 2.0"
Audio:	High quality audio files for remote validation and secondary (AI) processing.
Weight:	Logger: 338g (0.7lb) Leak Noise Sensor: 476g (1.0lb)
Construction:	PC/ABS plastic enclosure. Stainless steel LNS.
Ingress Protection:	IP68 submersible.
Antenna:	Multiple external options - contact HWM Global for more information.
Battery Life:	Typical 5 years (depending on settings and signal condition).
Internal Cellular Modem:	Cellular modem supporting 2G/4G/NBIoT/LTE-M (Cat-1) - contact HWM Global for available options and satellite based time synchronisation.
Alarms:	Leak/no leak. Signal received/not received.
Logger ID:	Readable factory set serial number in firmware.
Serial:	Laptop or desktop PC via USB

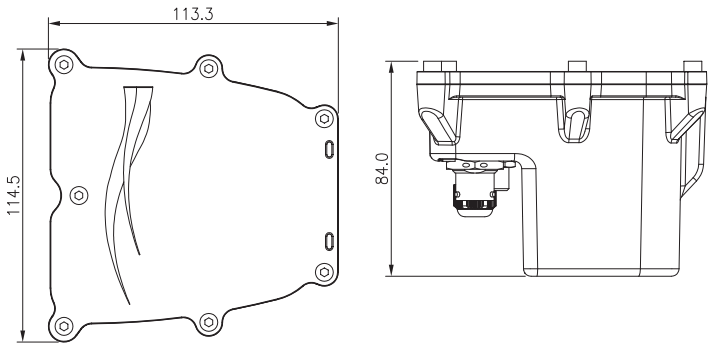

Installation Apps

Logger Installation Support

The HWM Global Deployment App is an installation tool that supports the quick and effective deployment of HWM Global manufactured data loggers. As well as recording installation details, the IDT App is used to test signal strength during installation.

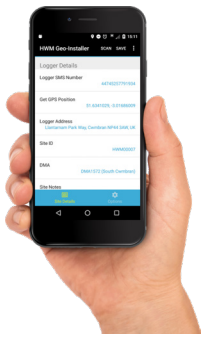

PermaNet Web

Secure Data Platform

PermaNet Web is a secure, web-based portal designed to support the PermaNet product range in the remote identification of network leakage. Supporting acoustic correlation, leak detection and logger programming, PermaNet Web delivers connectivity with multiple loggers and provides the user with numerous ways to view collected data.

With recently launched new features including Threshold Modelling and Electrical Noise Identification, as well as future improvements scheduled, PermaNet Web is an ever-evolving platform to support evidence-based decision making.

ISO 9001 QUALITY MANAGEMENT
ISO 14001 ENVIRONMENTAL MANAGEMENT
ISO 27001 INFORMATION SECURITY MANAGEMENT
ISO 45001 HEALTH & SAFETY MANAGEMENT
CYBER ESSENTIALS

HWM-Water Limited (Trading as HWM Global). Registered in England and Wales Number 01463016
and registered office is Ty Coch House | Llantarnam Park Way | Cwmbran | NP44 3AW | UK
DAT-138-0001-B 10.03.2026

A Halma company