HWM Global

Innovations that keep critical resources flowing.

hwmglobal.com
+44 (0)1633 489479

PermaNET SU

LTE-M & NBIoT-enabled Correlating Noise Logger

PermaNET SU is an innovative correlating noise logger that combines a leak noise sensor with our advanced modem (capable of connecting via LTE-M or NBIoT with 2G fallback, 4G or 2G) for reliable and low-powered network monitoring.

Designed specifically for smaller and more challenging installation areas, PermaNET SU is robust and durable.

PermaNET SU is fully compatible with PermaNET Web, the online data viewing and analysis platform, combining to provide map-based display, GIS interface and full audio and correlation facilities.

Applications

Once installed, leak data is calculated using the proven Permalog algorithm, and data is transmitted via low cost cellular telemetry. This removes the requirement for expensive site visits and "drive by" data retrieval.

PermaNET SU transmits data through an integral modem with 2G, 4G, LTE-M (Cat-M1) and other NBIoT cellular options available. PermaNET SU allows leakage teams to monitor the status of each logger deployed from map-based host software using any internet enabled device. Leaks are identified immediately and once the presence of a leak has been identified, secondary measures can be used to check and remove 'false positives' and also to localise the leak position.

Key Features

- **Telemetry:** NBIoT/LTE-M based cellular communication as standard with fallback 2G capability.
- **Sensor detection indicator:** daily check to confirm no sensor movement: alarm if a movement is detected.
- **Single compact unit:** combines leak noise sensor and telemetry technology into a single compact unit.
- **Robust and durable:** designed specifically for smaller and more challenging installation areas.
- **Quick response:** enables leakage teams to respond quickly to specific locations when a leak is detected.
- **Secondary validation:**
  - Aqualog - detailed noise histogram to reduce 'false positives'
  - Audio - remotely listen to the noise
  - Remote correlation to localise leak position
- **Fully waterproof:** the IP68 rating has been tested at 10m depth over a 24 hour period
- **Serial input:** for connection to digital meters, proprietary serial interface with LNS/ Hydrophone 2 leak noise sensors, and self-powered Modbus sensors.
- **PermaNET Web:** software supports
  - Correlation
  - Map view
  - Aqualog
  - select GIS file formats
  - Remote configuration
  - Filtering
  - Threshold Modelling
  - Electrical Noise identification
- **Long-term monitoring:** 5-year battery life. Based on typical use, minimising need for repeat site visits to replace batteries.

HWM Global

Innovations that keep critical resources flowing.

hwmglobal.com
+44 (0)1633 489479

PermaNET SU

LTE-M & NBIoT-enabled Correlating Noise Logger

Specifications

Operating Temp:	-20 to +60°C (-5 to +140°F)
Memory:	Primary recording: 1 million readings
Dimensions:	120H x 60D (mm) - 4.7" x 2.3"
Weight:	700g (1.5lb)
Ingress Protection:	IP68 submersible
Antenna:	Multiple external options - contact HWM Global for more information
Battery Life:	Typical 5 years (depending on settings and signal condition)
Internal Cellular Modem:	Cellular modem supporting 2G/4G/ NBIoT/LTE-M (Cat-M1) - contact HWM Global for available options
Alarms:	Leak/no leak Signal received/not received

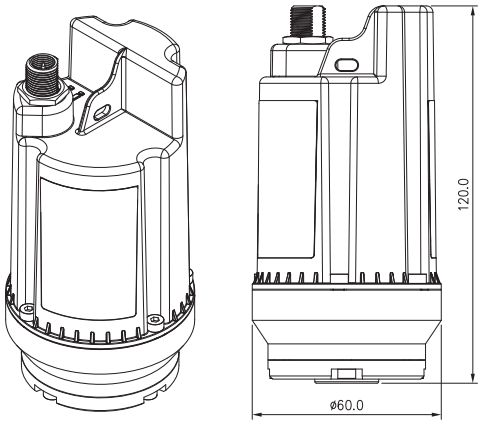

Installation Apps

Logger Installation Support

The HWM Global Deployment App is an installation tool that supports the quick and effective deployment of HWM Global manufactured data loggers. As well as recording installation details, the IDT App is used to test signal strength during installation.

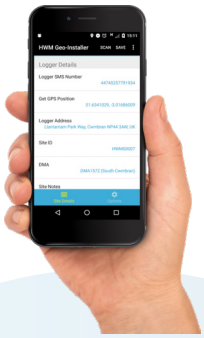

PermaNET Web

Secure Data Platform

PermaNET Web is a secure, web-based portal designed to support the PermaNET product range in the remote identification of network leakage. Supporting acoustic correlation, leak detection and logger programming, PermaNET Web delivers connectivity with multiple loggers and provides the user with numerous ways to view collected data.

With recently launched new features including Threshold Modelling and Electrical Noise Identification, as well as future improvements scheduled, PermaNET Web is an ever-evolving platform to support evidence-based decision making.

ISO 9001 QUALITY MANAGEMENT
ISO 14001 ENVIRONMENTAL MANAGEMENT
ISO 27001 INFORMATION SECURITY MANAGEMENT
ISO 45001 HEALTH & SAFETY MANAGEMENT
CYBER ESSENTIALS

HWM-Water Limited (Trading as HWM Global). Registered in England and Wales Number 01463016
and registered office is Ty Coch House | Llantarnam Park Way | Cwmbran | NP44 3AW | UK
DAT-155-0001-D 17.12.2025

A Halma company